628.034

Work Order ID 72837

Tuesday, August 16, 2011 9:16:11 AM

Item ID: D2842-042 **Accept** **Setup Start** **Stop**

Revision ID:

Item Name: Step Assembly RH, 206 Float

Start Date: 8/16/2011 **Start Qty:** 4.00 **Cust Item ID:**

Required Date: 8/26/2011 **Req'd Qty:** 4.00 **Customer:**

Reference:

Approvals: **Process Plan:** ll **Date:** 11-08-11 **Tooling:** **Date:** **Run Start** **Stop**

QC: **Date:** **SPC (Y/N):** **Date:**

Sequence ID/ Work Center ID	Operation Description	Set Up/ Run Hours	Tool ID	Tool #	Plan Code	Accept Qty	Reject Qty	Reject Number	Insp. Stamp
Draw Nbr	**Revision Nbr**								
D2842	Rev B								
100		0.00							
Large Fab	Large Fab								
Large Fab	**Memo**	0.00							
Large Fab	1-Cut D2842-1 using D2622 extrusion as per Dwg D2842 2-Drill D2842-1 using Jig DT8272 as per Dwg D2842 3-Deburr and bevel ends for welding								
105	QC6- Inspect dimensions to drawing	0.00							
QC	**Memo**	0.00							
Quality Control									
110	Weld per dwg A/R Aluminum rod Batch 117884 114514	0.00							
Large Fab									
Large Fab	**Memo**	0.00							
Large Fab	1-Weld one end cap and (2) lugs as per Dwg D2842 2-Grind end cap weld flush								

11-08-26 4 ø

PpC 11-09-01 4x

11-08-06 4 ø

Ae 11-09-13 4 ø

Dart Aerospace Ltd

W/O:	WORK ORDER CHANGES						
DATE	STEP	PROCEDURE CHANGE	By	Date	Qty	Approval Chief Eng / Prod Mgr	Approval QC Inspector

Part No: _____ **PAR #:** _____ **Fault Category:** _____ **NCR:** Yes No **DQA:** _____ **Date:** _____

Resolution: _____ **Disposition:** _____ **QA: N/C Closed:** _____ **Date:** _____

NCR:	WORK ORDER NON-CONFORMANCE (NCR)							
DATE	STEP	Description of NC Section A	Corrective Action Section B			Verification Section C	Approval Chief Eng	Approval QC Inspector
			Initial Chief Eng	Action Description Chief Eng	Sign & Date			

NOTE: Date & initial all entries

H:\fFORMS\Quality Assurance\approved QA\NCRWO RevE

Work Order ID 72837

Tuesday, August 16, 2011 9:16:11 AM

Item ID: D2842-042 **Accept** **Setup Start**

Revision ID: **Stop**

Item Name: Step Assembly RH, 206 Float

Start Date: 8/16/2011 **Start Qty:** 4.00 **Cust Item ID:**

Required Date: 8/26/2011 **Req'd Qty:** 4.00 **Customer:**

Reference:

Approvals: **Process Plan:** _____ **Date:** _____ **Tooling:** _____ **Date:** _____ **Run Start**

QC: _____ **Date:** _____ **SPC (Y/N):** _____ **Date:** _____ **Stop**

Sequence ID/ Work Center ID	Operation Description	Set Up/ Run Hours	Tool ID	Tool #	Plan Code	Accept Qty	Reject Qty	Reject Number	Insp. Stamp
120	QC9- Inspect visual per QSI004- Fusion Welds	0.00				4	Ø		BE 11/09/14
QC	Memo	0.00							
Quality Control									
130	QC5- Inspect part completeness to step on W/O	0.00							
QC	Memo	0.00				x4 RM			
Quality Control									
140	Chemical Conversion Coat per QSI005 4.1	0.00				4	Ø		
HandFinish	Memo	0.00							
Hand Finishing									

8 ulcalcy

RL 11.09.14

Dart Aerospace Ltd

W/O:		WORK ORDER CHANGES					
DATE	STEP	PROCEDURE CHANGE	By	Date	Qty	Approval Chief Eng / Prod Mgr	Approval QC Inspector

Part No: _____ PAR #: _____ Fault Category: _____ NCR: Yes No DQA: _____ Date: _____

Resolution: _____ Disposition: _____ QA: N/C Closed: _____ Date: _____

NCR:		WORK ORDER NON-CONFORMANCE (NCR)						
DATE	STEP	Description of NC Section A	Corrective Action Section B			Verification Section C	Approval Chief Eng	Approval QC Inspector
			Initial Chief Eng	Action Description Chief Eng	Sign & Date			

NOTE: Date & initial all entries

H:\fFORMS\Quality Assurance\approved QA\NCRWO RevE

Work Order ID 72837

Tuesday, August 16, 2011 9:16:11 AM

Item ID: D2842-042 **Accept** **Setup Start**

Revision ID: **Stop**

Item Name: Step Assembly RH, 206 Float

Start Date: 8/16/2011 **Start Qty:** 4.00 **Cust Item ID:**

Required Date: 8/26/2011 **Req'd Qty:** 4.00 **Customer:**

Reference:

Approvals: **Process Plan:** _____ **Date:** _____ **Tooling:** _____ **Date:** _____ **Run Start**

QC: _____ **Date:** _____ **SPC (Y/N):** _____ **Date:** _____ **Stop**

Sequence ID/ Work Center ID	Operation Description	Set Up/ Run Hours	Tool ID	Tool #	Plan Code	Accept Qty	Reject Qty	Reject Number	Insp. Stamp
150	QC3- Inspect Part Finish	0.00							
QC	**Memo**	0.00				4	BL	11-9-15.	
Quality Control									
160	Weld per dwg A/R Aluminum rod Batch: 114514	0.00							
Large Fab	Large Fab					4	ϕ		
Large Fab	**Memo**	0.00							
	1-Remove alodine prior to welding. Weld end cap as per Dwg D2842. 2-Grind end cap weld flush.								
			RL 11·09·15						
170	QC10- Inspect visual per QSI004- ground welds	0.00							
QC	**Memo**	0.00				x4			
Quality Control						RH			

S 11/09/16

Dart Aerospace Ltd

W/O:		WORK ORDER CHANGES					
DATE	STEP	PROCEDURE CHANGE	By	Date	Qty	Approval Chief Eng / Prod Mgr	Approval QC Inspector

Part No: _____ **PAR #:** _____ **Fault Category:** _____ **NCR:** Yes No **DQA:** _____ **Date:** _____

Resolution: _____ **Disposition:** _____ **QA: N/C Closed:** _____ **Date:** _____

NCR:		WORK ORDER NON-CONFORMANCE (NCR)						
DATE	STEP	Description of NC Section A	Corrective Action Section B			Verification Section C	Approval Chief Eng	Approval QC Inspector
			Initial Chief Eng	Action Description Chief Eng	Sign & Date			

NOTE: Date & initial all entries

H:\FORMS\Quality Assurance\approved QA\NCRWO RevE

Work Order ID 72837

Tuesday, August 16, 2011 9:16:11 AM

Item ID: D2842-042 **Accept** **Setup Start** **Stop**

Revision ID:

Item Name: Step Assembly RH, 206 Float

Start Date: 8/16/2011 **Start Qty:** 4.00 **Cust Item ID:**

Required Date: 8/26/2011 **Req'd Qty:** 4.00 **Customer:**

Reference:

Approvals: **Process Plan:** _____ **Date:** _____ **Tooling:** _____ **Date:** _____ **Run Start** **Stop**

QC: _____ **Date:** _____ **SPC (Y/N):** _____ **Date:** _____

Sequence ID/ Work Center ID	Operation Description	Set Up/ Run Hours	Tool ID	Tool #	Plan Code	Accept Qty	Reject Qty	Reject Number	Insp. Stamp
180	QC5- Inspect part completeness to step on W/O	0.00							
QC	Memo	0.00							
Quality Control									
185	Pressure Wash per QSI005 4.3	0.00							
HandFinish	Memo	0.00							
Hand Finishing	***Touch up step with alodine per qsi 005 prior to powder coat***								
190	White Gloss(Ref:4.3.5.1) per QSI005 4.3-Alum	0.00							
Powdercoat	Memo	0.00							
Powder Coating	START TIME: 10:30 OVEN TEMPERATURE: 320°F FINISH TIME: 11:00								

8 ml 08/16

~~24~~ RH

4X Ø ml 11/08/16 RHx

4X Ø ml 11/08/19 RH

Dart Aerospace Ltd

W/O:		WORK ORDER CHANGES					
DATE	STEP	PROCEDURE CHANGE	By	Date	Qty	Approval Chief Eng / Prod Mgr	Approval QC Inspector

Part No: _____ **PAR #:** _____ **Fault Category:** _____ **NCR:** Yes No **DQA:** _____ **Date:** _____

Resolution: _____ **Disposition:** _____ **QA: N/C Closed:** _____ **Date:** _____

NCR:		WORK ORDER NON-CONFORMANCE (NCR)						
DATE	STEP	Description of NC Section A	Corrective Action Section B			Verification Section C	Approval Chief Eng	Approval QC Inspector
			Initial Chief Eng	Action Description Chief Eng	Sign & Date			

NOTE: Date & initial all entries

H:\fFORMS\Quality Assurance\approved QA\NCRWO RevE

Work Order ID 72837

Tuesday, August 16, 2011 9:16:11 AM

Item ID: D2842-042 **Accept** **Setup Start**

Revision ID: **Stop**

Item Name: Step Assembly RH, 206 Float

Start Date: 8/16/2011 **Start Qty:** 4.00 **Cust Item ID:**

Required Date: 8/26/2011 **Req'd Qty:** 4.00 **Customer:**

Reference:

Approvals: **Process Plan:** _____ **Date:** _____ **Tooling:** _____ **Date:** _____ **Run Start**

QC: _____ **Date:** _____ **SPC (Y/N):** _____ **Date:** _____ **Stop**

Sequence ID/ Work Center ID	Operation Description	Set Up/ Run Hours	Tool ID	Tool #	Plan Code	Accept Qty	Reject Qty	Reject Number	Insp. Stamp
200	QC3- Inspect Part Finish	0.00							
QC	**Memo**	0.00				4	BL 11-9-19.		
Quality Control									
210		0.00							
HandFinish	HandFinishing					4.	BL 11-9-19		
Hand Finishing	**Memo**	0.00							
	1-Install inserts as per Dwg D2842 2-Wing Walk as per Dwg D2842 and QSI 005 4.1 Batch: 118313.	~~PO 72837~~							
220	QC5- Inspect part completeness to step on W/O	0.00							
QC	**Memo**	0.00				X4 R4			
Quality Control									

S 11/09/20

Dart Aerospace Ltd

W/O:		WORK ORDER CHANGES					
DATE	STEP	PROCEDURE CHANGE	By	Date	Qty	Approval Chief Eng / Prod Mgr	Approval QC Inspector

Part No: _____ **PAR #:** _____ **Fault Category:** _____ **NCR:** Yes No **DQA:** _____ **Date:** _____

Resolution: _____ **Disposition:** _____ **QA: N/C Closed:** _____ **Date:** _____

NCR:		WORK ORDER NON-CONFORMANCE (NCR)						
DATE	STEP	Description of NC Section A	Corrective Action Section B			Verification Section C	Approval Chief Eng	Approval QC Inspector
			Initial Chief Eng	Action Description Chief Eng	Sign & Date			

NOTE: Date & initial all entries

H:\fFORMS\Quality Assurance\approved QA\NCRWO RevE

Work Order ID 72837

Tuesday, August 16, 2011 9:16:11 AM

Item ID: D2842-042 **Accept** **Setup Start**

Revision ID:

Item Name: Step Assembly RH, 206 Float **Stop**

Start Date: 8/16/2011 **Start Qty:** 4.00 **Cust Item ID:**

Required Date: 8/26/2011 **Req'd Qty:** 4.00 **Customer:**

Reference:

Approvals: **Process Plan:** _____ **Date:** _____ **Tooling:** _____ **Date:** _____ **Run Start**

QC: _____ **Date:** _____ **SPC (Y/N):** _____ **Date:** _____ **Stop**

Sequence ID/ Work Center ID	Operation Description	Set Up/ Run Hours	Tool ID	Tool #	Plan Code	Accept Qty	Reject Qty	Reject Number	Insp. Stamp
230	Identify as per dwg & Stock Location:_____	0.00							
Packaging	Memo PP 72833	0.00					11/9/20		
Packaging									
240	QC21- Final Inspection - Work Order Release	0.00					11/9/20		
QC	Memo	0.00							
Quality Control									

MF 11-09-20

Dart Aerospace Ltd

W/O:		WORK ORDER CHANGES					
DATE	STEP	PROCEDURE CHANGE	By	Date	Qty	Approval Chief Eng / Prod Mgr	Approval QC Inspector

Part No: _____ **PAR #:** _____ **Fault Category:** _____ **NCR:** Yes No **DQA:** _____ **Date:** _____

Resolution: _____ **Disposition:** _____ **QA: N/C Closed:** _____ **Date:** _____

NCR:		WORK ORDER NON-CONFORMANCE (NCR)						
DATE	STEP	Description of NC Section A	Corrective Action Section B			Verification Section C	Approval Chief Eng	Approval QC Inspector
			Initial Chief Eng	Action Description Chief Eng	Sign & Date			

NOTE: Date & initial all entries

Picklist Print

Tuesday, August 16, 2011 9:16:17 AM

Work Order ID: 72837

Parent Item: D2842-042

Parent Item Name: Step Assembly RH, 206 Float

Start Date: 8/16/2011 **Required Date:** 8/26/2011

Start Qty: 4.00 **Required Qty:** 4.00

Comments: IPP Rev:D As Per Ecn 766 06-01-06 JLM

Component Item ID/ Item Name	Replacement Item ID	Mfg/ Purch	Bin Item	Primary Location	Last Location	Route Seq ID	Unit of Measure	Qty on Hand	Qty per Kit	Total Qty	Qty Issued	Date Issued	Status
AN960C10L	NAS1149C0332R	Purchased	No	118354.		100	Each	0.0000	3	12	BR	11-9-19.	
washer										12.			
D2622-120C		Manufactured	No			110	Each	83.7000	1	4	Ae	11.08.26.	
Step Extrusion													
				Location		**Loc Qty**		**Loc Code**					
				HALL		74							
					64409	6							
					68293	68				(x4)			
				WA		9.7							
					46910	2							
					66970	7.7							
D2734		Manufactured	No			110	Each	45.0000	2	8		11.09.15	
Step End Plate													
				Location		**Loc Qty**		**Loc Code**					
				WA		45							
					70701	45				4+4			
D3459-1		Manufactured	No			110	Each	15.0000	2	8		11.09.01	
Float Step Mounting Plate													
				Location		**Loc Qty**		**Loc Code**					
				WA017		15							
					62955	15				8			

Dart Aerospace Ltd

W/O:		WORK ORDER CHANGES					
DATE	STEP	PROCEDURE CHANGE	By	Date	Qty	Approval Chief Eng / Prod Mgr	Approval QC Inspector

Part No: _____ **PAR #:** _____ **Fault Category:** _____ **NCR:** Yes No **DQA:** _____ **Date:** _____

Resolution: _____ **Disposition:** _____ **QA: N/C Closed:** _____ **Date:** _____

NCR:		WORK ORDER NON-CONFORMANCE (NCR)						
DATE	STEP	Description of NC Section A	Corrective Action Section B			Verification Section C	Approval Chief Eng	Approval QC Inspector
			Initial Chief Eng	Action Description Chief Eng	Sign & Date			

NOTE: Date & initial all entries

Picklist Print

Tuesday, August 16, 2011 9:16:17 AM

Work Order ID: 72837

Parent Item: D2842-042

Parent Item Name: Step Assembly RH, 206 Float

Start Date: 8/16/2011 **Required Date:** 8/26/2011

Start Qty: 4.00 **Required Qty:** 4.00

D3459-3 Float Step Mounting Plate	Manufactured	No	210	Each	21.0000	2	8	11.09.01

Location		Loc Qty	Loc Code	
ST017		21		
	62956	21		8

MS27039C1-07 screw	Purchased	No	210	Each	53.0000	3	12	BR 11-9-19.

Location		Loc Qty	Loc Code	
ST293		53		
	117423✓	53		12

NAS1329C3KB130 insert	Purchased	No	210	Each	52.0000	3	12	BR 11-9-19.

Location		Loc Qty	Loc Code	
FP-A		2		
	115719	2		
ST276		50		
	117679✓	50		12

NAS1515H3L WASHER	Purchased	No	210	Each	152.0000	3	12	BR 11-9-19.

Location		Loc Qty	Loc Code	
FG	118686.	40		12
	102472	40		
ST277		112		
	113362	112		

Dart Aerospace Ltd

W/O:		WORK ORDER CHANGES					
DATE	STEP	PROCEDURE CHANGE	By	Date	Qty	Approval Chief Eng / Prod Mgr	Approval QC Inspector

Part No: _____ **PAR #:** _____ **Fault Category:** _____ **NCR:** Yes No **DQA:** _____ **Date:** _____

Resolution: _____ **Disposition:** _____ **QA: N/C Closed:** _____ **Date:** _____

NCR:		WORK ORDER NON-CONFORMANCE (NCR)						
DATE	STEP	Description of NC Section A	Corrective Action Section B			Verification Section C	Approval Chief Eng	Approval QC Inspector
			Initial Chief Eng	Action Description Chief Eng	Sign & Date			

NOTE: Date & initial all entries

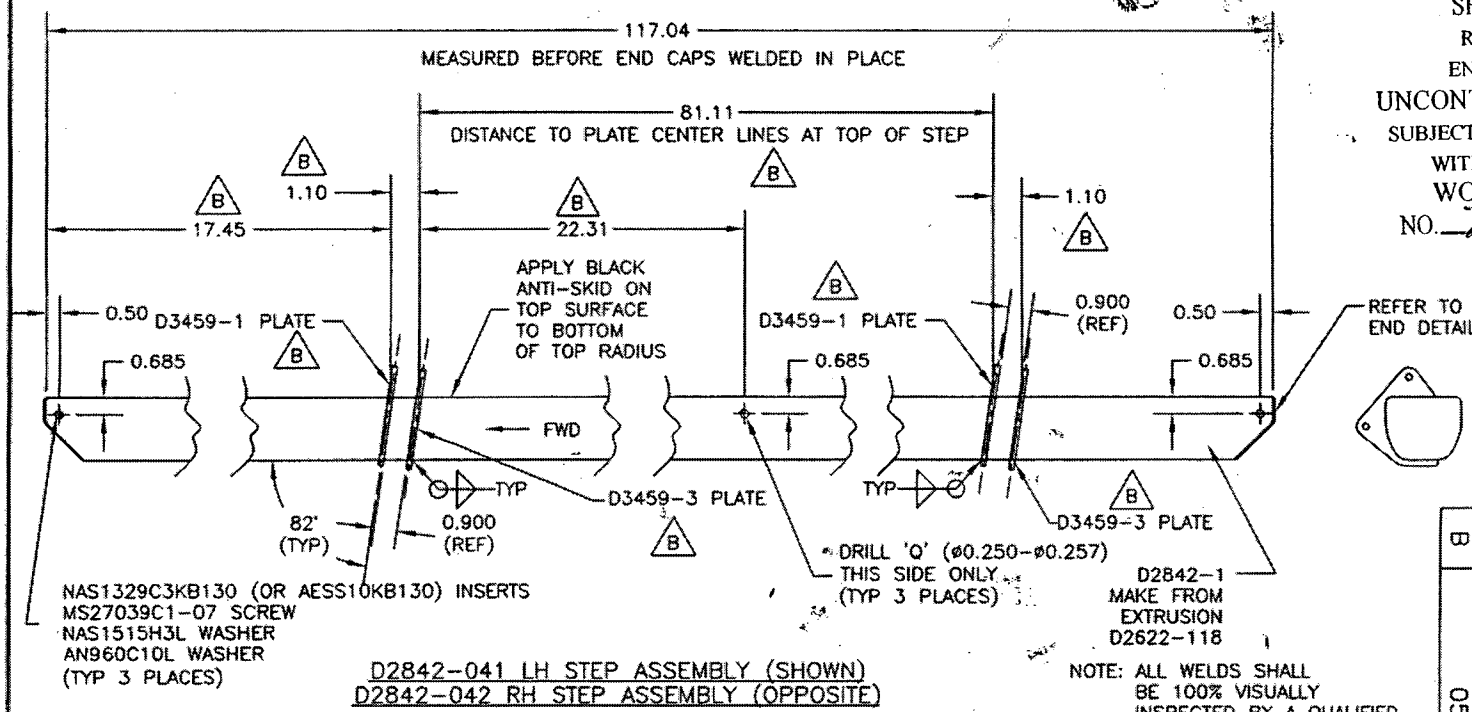

D2842-041 LH STEP ASSEMBLY (SHOWN)
D2842-042 RH STEP ASSEMBLY (OPPOSITE)

NOTE: ALL WELDS SHALL BE 100% VISUALLY INSPECTED BY A QUALIFIED INSPECTOR PER DART QSI 004

SHOP COPY
RETURN TO ENGINEERING
UNCONTROLLED COPY
SUBJECT TO AMENDMENT WITHOUT NOTICE
WORK ORDER NO. 72837

D2842-041/-042 FLOAT STEP ASSEMBLY PARTS LIST

QTY -041	QTY -042	PART NUMBER	DESCRIPTION
X		D2842-041	LH STEP ASSEMBLY
	X	D2842-042	RH STEP ASSEMBLY
1	1	D2622-118	EXTRUSION
2	2	D2734	END PLATE
2	2	D3459-1	PLATE
2	2	D3459-3	PLATE
3	3	NAS1329C3KB130 (OR AESS10KB130)	INSERT
3	3	MS27039C1-07	SCREW
3	3	NAS1515H3L	WASHER
3	3	AN960C10L	WASHER

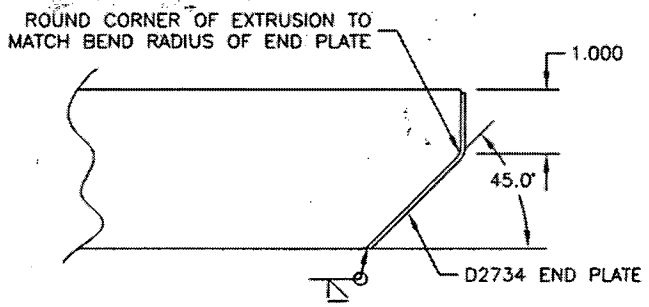

TYPICAL STEP END DETAIL
NOT TO SCALE

RELEASED
8-11-14

D2842-041/-042 FLOAT STEP ASSEMBLY

1) MAKE FROM EXTRUSION D2622
2) WELD PER DART QSI 004
3) FINISH: CHEMICAL CONVERSION COAT PER DART QSI 005 4.1
   POWDER COAT ASSEMBLY WHITE (4.3.5.1) PER DART QSI 005 4.3
   APPLY BLACK ANTI-SKID PAINT PER DART QSI 005 4.4
4) ALL DIMENSIONS ARE IN INCHES
5) ALL TOLERANCES ARE PER DART QSI 018 UNLESS OTHERWISE NOTED

REV	DATE	DESCRIPTION
A	98.10.13	NEW ISSUE
B	05.09.23	RE-DESIGN, ADD D3459-1/-3

DESIGN: KE | DRAWN BY: PH | CHECKED | APPROVED | DATE: 05.09.23

DART AEROSPACE USA, INC.
PORT HADLOCK, WA

DRAWING NO. D2842 | REV. B | SHEET 1 OF 1

TITLE: 206L/407 FLOAT STEP ASSEMBLY | SCALE: NTS

Copyright © 2005 by DART AEROSPACE USA, INC.
THIS DOCUMENT IS PRIVATE AND CONFIDENTIAL AND IS SUPPLIED ON THE EXPRESS CONDITION THAT IT IS NOT TO BE USED FOR ANY PURPOSE OR COPIED OR COMMUNICATED TO ANY OTHER PERSON WITHOUT WRITTEN PERMISSION FROM DART AEROSPACE USA, INC.